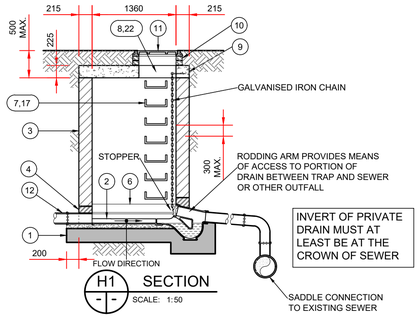

MANHOLE TYPE H
INTERCEPTOR TRAP DETAILS
FOR OUTFALL MANHOLES AT SITE BOUNDARY
PRIOR TO CONNECTING TO PUBLIC SYSTEM

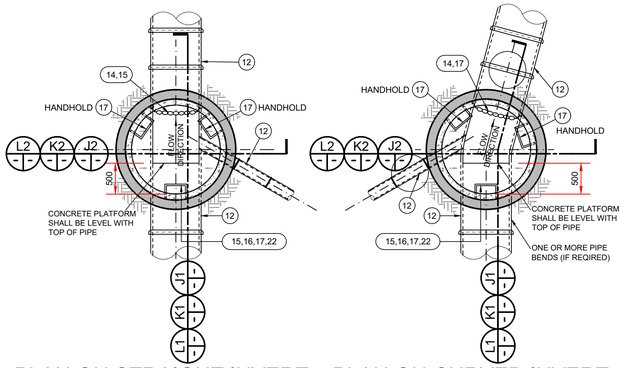

PLAN ON STRAIGHT INVERT
(WITHOUT COVER SLAB)

PLAN ON CURVED INVERT
(WITHOUT COVER SLAB)

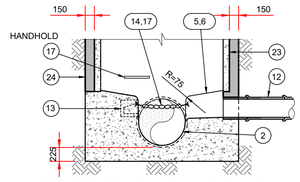

SECTIONS L2, K2 & J2 THRO' PRECAST BASE
1:50

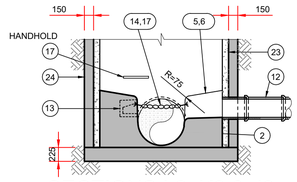

SECTIONS L2, K2 & J2 THRO' INSITU BASE
1:50

COMMON DETAILS

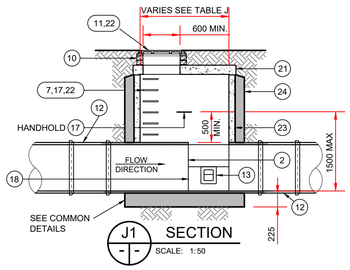

TABLE J	
MAXIMUM PIPE DIAMETER A	CHAMBER INTERNAL DIAMETER B
LESS THAN 375	1200
375 TO 450	1350
500 TO 750	1500

MANHOLE TYPE J
1m < DEPTH TO CROWN < 3m

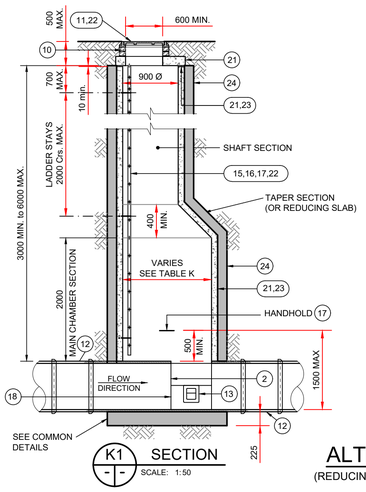

TABLE K	
MANHOLE PIPE Ø A	CHAMBER INTERNAL Ø B
LESS THAN 375	1200
375 TO 450	1350
500 TO 750	1500
900	1500
1050	2100
1200	2100

MANHOLE TYPE K
3m ≤ DEPTH TO INVERT < 6m

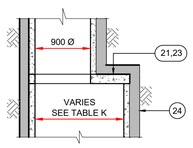

ALTERNATIVE DETAIL
(REDUCING SLAB INSTEAD OF TAPER SECTION)

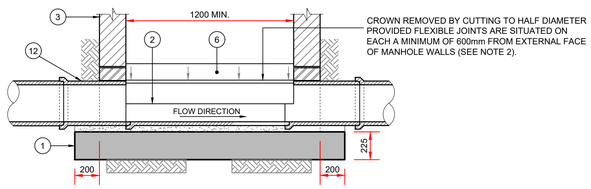

ALTERNATIVE METHOD OF FORMING CHANNEL THROUGH MANHOLE
SCALE 1:25

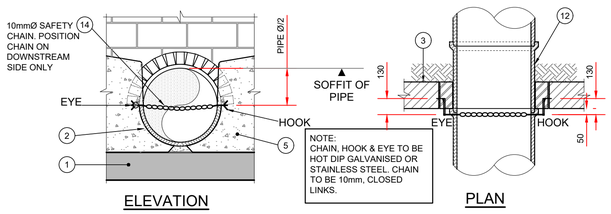

ELEVATION

PLAN

SAFETY CHAIN, HOOK & EYE DETAIL N.T.S.

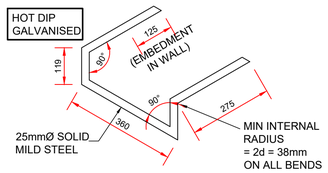

STANDARD RUNG
(IRON STEPS NOT PERMITTED)
SCALE 1:10

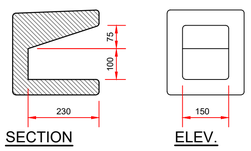

SECTION

ELEV.

DETAILS OF TOE HOLD
SCALE 1:10

NOTES:

1) 225mm THICK C30/37 MASS CONCRETE FOUNDATIONS,

2) PREFORMED HALF CIRCLE CHANNEL PIPES, THE THE PIPELINE MAY, WHERE PRACTICABLE BE LAID THROUGH THE MANHOLE & THE CROWN CUT OUT TO HALF DIAMETER, PROVIDED FLEXIBLE JOINTS ARE SITUATED ON EACH SIDE NO FURTHER THAN 600mm FROM INNER FACE OF THE MANHOLE WALL.

NOTE: WHERE PIPE DIAMETER CHANGES AT A MANHOLE PIPE CROWNS TO LINE UP

3) MANHOLE CONSTRUCTION:

a) FOR SURFACE WATER MANHOLES HIGH-DENSITY BLOCKS 20N STRENGTH TO I.S. EN 771 OR C30/37 INSITU CONCRETE TO IS EN 206.

b) BLOCK WORK SHALL BE EMBEDDED & JOINTED USING MORTAR TO IS 406. BEDS & VERTICAL JOINTS TO BE COMPLETELY FILLED WITH MORTAR AS THE BLOCKS ARE LAID.

c) ALL FOUL MANHOLES MUST BE FACED IN SOLID ENGINEERING BRICK (MIN CLASS 'A' OR 'B') OR INSITU CONCRETE FOR 1m ABOVE BENCHING LEVEL BRICK TO BE BONDED TO BLOCK WORK USING GARDEN WALL BOND.

d) JOINTS SHALL BE FLUSH AND POINTED AS THE WORK PROCEEDS.

e) MAX DEPTH OF BLOCKWORK MANHOLE IS 1.2m (THE USE OF BLOCK IN DEEPER MANHOLES WILL BE CONSIDERED BUT SUCH WILL REQUIRE DETAILED STRUCTURAL DESIGN AND WRITTEN APPROVAL FROM IRISH WATER.

4) RELIEVING ARCH FORMED BY 215 X 103 X 65 SOLID ENGINEERING BRICK CLASS 'A' OR 'B'. RELIEVING ARCHES USED IN BRICK OR BLOCK WORK MANHOLES EXTEND OVER FULL THICKNESS OF WALL A DOUBLE ARCH IS TO BE FORMED FOR PIPE DIAMETER GREATER THAN 600mm.

5) BENCHING & PIPE SURROUND - C30/37 CONCRETE.

6) BENCHING FINISHED IN SAND-CEMENT MORTAR WITH SMOOTH TOWEL FINISH, AT 1 IN 30 SLOPE TOWARDS CHANNEL.

7) STANDARD RUNGS AT 300mm c/c VERTICALLY & GALVANISED TO THE LATEST VERSION OF BS 729 OR EQUIVALENT. NOTE IRONS ARE NOT ACCEPTABLE.

8) 600mm SQUARE OPE IN ROOF.

9) PRECAST R.C ROOF SLAB SHALL BE 200mm THICK CLASS C30/37 WITH 40mm COVER TO STEEL DESIGNED TO BS 8100 TO TAKE FULL TRAFFIC LOADING.

10) 1 TO 2 COURSES OF SOLID ENGINEERING BRICKS CLASS 'B' TO IS 91.1983 SET IN C50/60 MORTAR.

11) CLASS D400 OR E600 MANHOLE COVER AND FRAME TO IS EN 124. 150mm DEEP FRAME FOR ROADS & 100mm DEEP FOR FOOTPATHS & GREEN AREAS, NON-ROCK DESIGN, CLOSED KEYWAYS, MANUFACTURED FROM SPHERICAL GRAPHITE CAST IRON (DUCTILE CAST IRON) 600 x 600 (600Ø) CLEAR OPENING, COVER & FRAME COATED IN BITUMEN OR OTHER APPROVED MATERIAL, COVER TO HAVE MINIMUM MASS OF 140kg/M2 FRAME BEARING AREA SHALL BE DESIGNED TO PREVENT COVERS FALLING INTO MANHOLE, FRAMES SHALL BE BEDDED ON APPROVED MORTAR TO MANUFACTURERS INSTRUCTIONS.

12) SHORT LENGTH PIPE & PIPE JOINT EXTERNAL TO MANHOLE SHALL NOT EXCEED 600mm FROM THE INNER FACE OF MANHOLE WALL.

13) TOE HOLES OF 230mm MINIMUM DEPTH & GALVANISED SAFETY RAILINGS TO BE PROVIDED IN BENCHING OF SEWERS GREATER THAN 525mmØ & DEPTH TO INVERT >3M FOR ACCESS TO INVERT.

14) A STAINLESS STEEL CHAIN IS TO BE PROVIDED ON PIPES THAT EXCEED 450mmØ , COMPLYING WITH BS 4942 PART 2 OR EQUIVALENT.

15) WHEN THE DEPTH OF MANHOLES TO INVERT IS GREATER THAN 3.0m LADDERS SHALL BE USED, INSTEAD OF RUNGS TO BS 4211 OR EQUIVALENT EXCEPT THAT STRINGERS SHOULD BE NOT LESS THAN 65x12mm IN SECTIONS & RUNGS 25mm IN DIAMETER. FIXED LADDERS SHOULD MEET THE DIMENSIONAL REQUIREMENTS OF BS4211 OR EQUIVALENT. DISTANCE FROM THE TOP RUNG OF THE LADDER TO GROUND LEVEL SHOULD NOT EXCEED 500mm

16) LADDER STRINGERS SHOULD BE ADEQUATELY SUPPORTED FROM THE MANHOLE WALL AT INTERVALS OF NOT MORE THAN 2.0m. STRINGERS SHOULD BE BOLTED TO CLEATS TO FACILITATE RENEWAL .

17) ALL LADDER RUNGS, HANDRAILS, SAFETY CHAINS ETC. SHALL BE HOT DIPPED GALVANISED TO BS 729 OR EQUIVALENT.

18) PIPE SHOULD BE CUT FLUSH WITH THE INSIDE SURFACE OF THE MANHOLE WALL SO THAT CHANNEL EXTENDS THE FULL LENGTH OF THE MANHOLE.

19) POSITION OF 910 SQUARE OPE IN INTERMEDIATE ROOF SLAB.

a) ALL MANHOLES SHALL BE WATERTIGHT TO THE SATISFACTION OF THE ENGINEER.
b) FORMWORK TO REINFORCED CONCRETE & MASS CONCRETE SHALL COMPLY WITH CLASS 2 SECTION 6.2.7, BS 8110:PART 1:1997
c) FINISH TO THE TOP OF SLABS SHALL COMPLY WITH TYPE A SECTION 6.2.7, BS8110, PART 1997.
d) PLAN DIMENSIONS OF MANHOLES ARE BASED ON BLOCKWORK HAVING A CO-ORDINATING SIZE OF 450 x 225 x 100. FORT PIPE DIAMETER OF >750mm USE MANHOLE WITH INTERNAL DIAMETER SIZE = PIPE SIZE +1m +300mm
e) MANHOLES ARE DESIGNED TO BS8005 & WALL THICKNESS TO IS325, BLOCK WORK DESIGN CODE TAKING GRANULAR FILL PRESSURE & H.B SURCHARGE.
f) REINFORCEMENT TO SLABS ENGINEERS DETAILS.

20) FOR MANHOLES >3m DEPTH TO INVERT USE C30/37 INSITU CONCRETE, REINFORCING MESH REF.. A393 TO BE FIXED AT MID POINT OF WALL. ADDITIONAL REINFORCEMENT TO BE SUPPLIED OVER PIPE CROWN.

21) PRECAST MANHOLES, CHAMBER WALLS & COVER SLAB TO BE CONSTRUCTED TO IS EN 1917 & IS 420:2004

22) MANHOLE OPENINGS TO BE SITUATED FURTHEST FROM THE NEAREST CARRIAGEWAY. MANHOLE STEPS-ACCESS TO BE POSITIONED TO ALLOW VIEWING OF ONCOMING TRAFFIC

23) FOR BEDDING & SEALING OF CHAMBER RINGS, THE TOP RING (TO PRECAST OVER SLAB) & BOTTOM RING TO BE BEDDED WITH CEMENT MORTAR. FOR INTERMEDIATE RINGS, JOINTS TO BE SEALED WITH APPROVED PREFORMED JOINTING STRAP

24) PRECAST MANHOLES TO BE SURROUNDED WITH A MINIMUM OF 150mm THICK GRADE C16/20 CONCRETE.

25) ALL FOUL MANHOLES TO COMPLY WITH REQUIREMENTS OF IRISH WATER STD-WW-09 TO 13

NOTES:

1. FIGURED DIMENSIONS ONLY TO BE TAKEN FROM THIS DRAWING.
2. ALL DRAWINGS TO BE CHECKED BY THE CONTRACTOR ON SITE.
3. ENGINEER/EMPLOYERS REPRESENTATIVE, AS APPROPRIATE, TO BE INFORMED BY THE CONTRACTOR OF ANY DISCREPANCIES BEFORE ANY WORK COMMENCES.
4. THE CONTRACTOR SHALL UNDERTAKE A THOROUGH CHECK FOR THE ACTUAL LOCATION OF ALL SERVICES/UTILITIES, ABOVE AND BELOW GROUND, BEFORE ANY WORK COMMENCES.
5. ALL LEVELS SHOWN RELATE TO ORDNANCE SURVEY DATUM AT MALIN HEAD.

Rev	Date	Description	By	Chkd.
P0-1	07.08.2024	ISSUE FOR PLANNING	GM	MG

Client: Comhairle Chontae na Gaillimhe Galway County Council

Project: Loughrea Fire Station

Title: Standard Manhole Details Sheet 2 of 2

Scale @ A1: As Shown

Prepared by: GM | Checked: MG | Date: Aug 2024

Project Director: Brian Carroll

Drawing Status: PLANNING

TOBIN CONSULTING ENGINEERS
TOBIN Consulting Engineers,
Fairgreen House, Fairgreen Road,
Galway, Ireland.
tel: +353-(0)91-565211
fax:+353-(0)91-565398
e-mail: galway@tobin.ie
www.tobin.ie

TOBIN Consulting Engineers will not be liable for any use of this document for any purpose other than that for which it was originally prepared and provided. Except where specifically and explicitly agreed in writing by TOBIN Consulting Engineers, as copyright holder, no part of this document may be reproduced or transmitted in any form and this document shall not be relied upon by any third party for any purpose.

Drawing No.: LFS-DR-TOB-CE-2007 Revision: P0-1