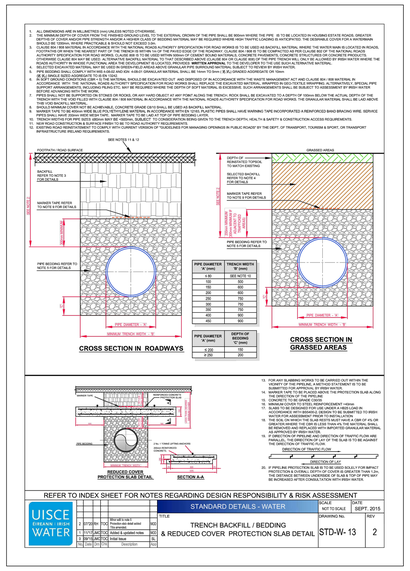

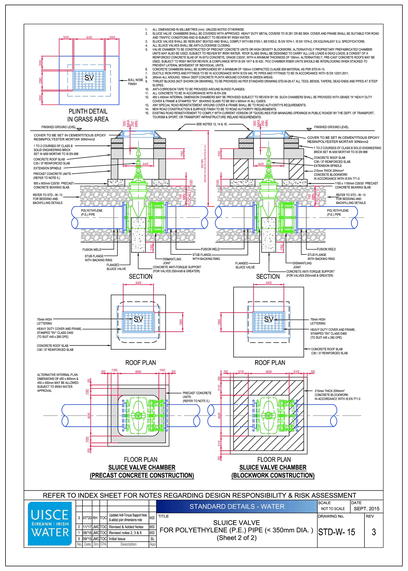

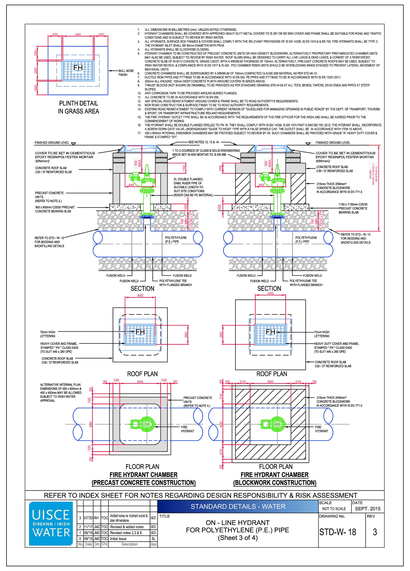

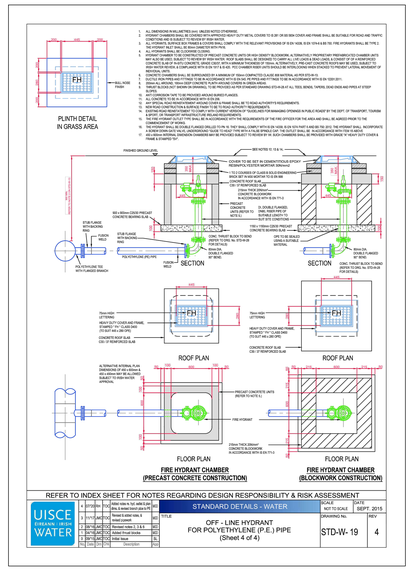

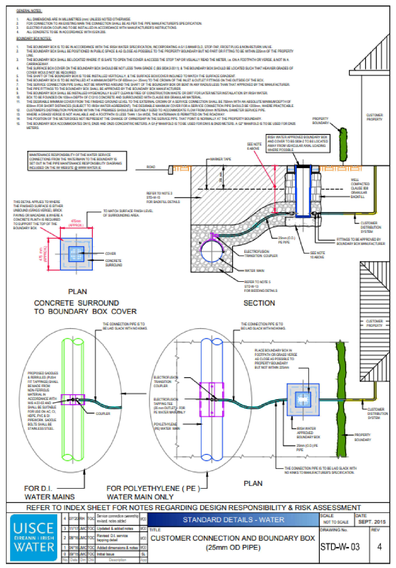

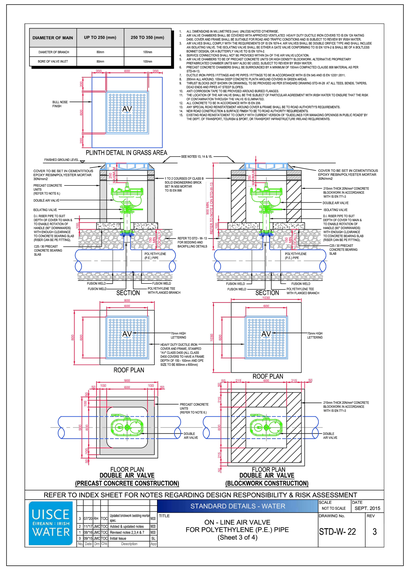

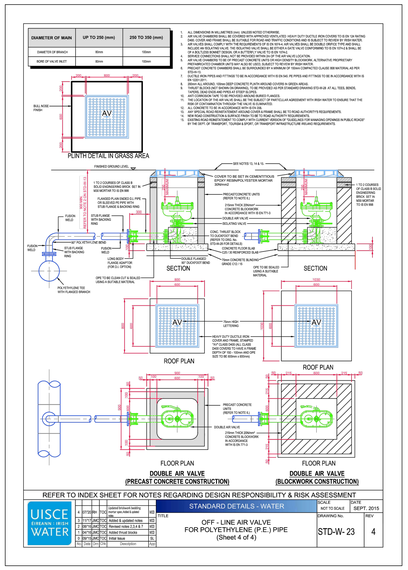

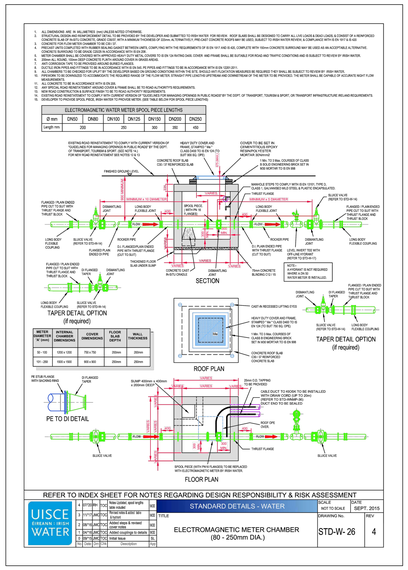

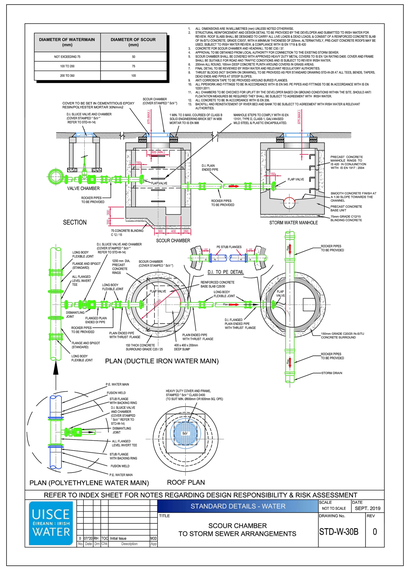

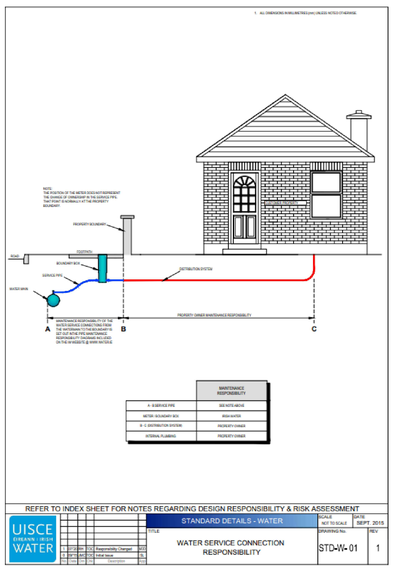

REV	BY	DD/MM/YY	DESCRIPTION

Client:
Comhairle Chontae na Gaillimhe
Galway County Council

Project:
Farranamartin Housing Development, Tuam, Galway

Stage:
Planning

Drawing title:
Watermain Construction Standard Details

Scale: As Shown
Size: A0
Drawn by: CB
Checked: CT
Architect: Collins-Rolston
Date: 08/04/2025

Gilligan
CONSULTING CIVIL & STRUCTURAL ENGINEERS
23 BEDFORD STREET, BELFAST, BT27EJ
TELEPHONE: 028 9023 2841 FACSIMILE: 028 9024 7104

Drawing No: 24561-GNI-XX-ZZ-C-0010
Revision: P